4'-0" Width x 4'-0" Height

Fill Height (Ft.)	Top Slab										Bottom Slab										Sidewall						Mark "E" Distribution				Quantities	
	TS	J	K	Mark	Type	Length	A	B	C	D	BS	M	N	Mark	Type	Length	A	B	C	D	SW	P	R	Mark	Type	Length	W	X	Y	Z	Concrete CY/LF	Steel LBS/LF
0-2	8"	5	6"	A	1	6- 7	4- 11	0- 10	0- 5	5- 4	9"	5	6"	B	1	7- 7	5- 11	0- 10	0- 5	6- 4	10"	5	12"	C	Str	5- 0	10"	5	12"	12"	0.58	61
2.01-5	8"	5	7"	A	1	6- 7	4- 11	0- 10	0- 5	5- 4	9"	5	7"	B	1	7- 7	5- 11	0- 10	0- 5	6- 4	10"	5	12"	C	Str	5- 0	10"	5	12"	12"	0.58	57
5-10	8"	5	9"	A	1	6- 7	4- 11	0- 10	0- 5	5- 4	9"	5	9"	B	1	7- 7	5- 11	0- 10	0- 5	6- 4	10"	5	12"	C	Str	5- 0	10"	5	12"	12"	0.58	52
10-15	8"	5	7"	A	1	6- 7	4- 11	0- 10	0- 5	5- 4	9"	5	7"	B	1	7- 7	5- 11	0- 10	0- 5	6- 4	10"	5	12"	C	Str	5- 0	10"	5	12"	12"	0.58	57
15-20	8"	5	6"	A	1	6- 7	4- 11	0- 10	0- 5	5- 4	9"	5	6"	B	1	7- 7	5- 11	0- 10	0- 5	6- 4	10"	5	12"	C	Str	5- 0	10"	5	12"	12"	0.58	61
20-25	8"	5	5"	A	1	6- 7	4- 11	0- 10	0- 5	5- 4	9"	5	5"	B	1	7- 7	5- 11	0- 10	0- 5	6- 4	10"	5	12"	C	Str	5- 0	10"	5	12"	12"	0.58	67
25-30	9"	5	5"	A	1	6- 7	4- 11	0- 10	0- 5	5- 4	10"	5	5"	B	1	7- 7	5- 11	0- 10	0- 5	6- 4	10"	5	12"	C	Str	5- 2	10"	5	12"	12"	0.62	68
30-35	9"	6	5"	A	1	6- 10	4- 10	1- 0	0- 6	5- 4	10"	6	5"	B	1	7- 10	5- 10	1- 0	0- 6	6- 4	10"	5	12"	C	Str	5- 2	10"	5	12"	12"	0.62	85
35-40	10"	6	5"	A	1	6- 10	4- 10	1- 0	0- 6	5- 4	11"	6	5"	B	1	7- 10	5- 10	1- 0	0- 6	6- 4	10"	5	12"	C	Str	5- 4	10"	5	12"	12"	0.65	85

NOTE:
Bar Dimensions are per bar.

NOTE:
A & B bars may need to be rotated to maintain shown clearances.

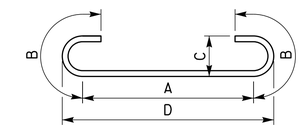

TYPE 1

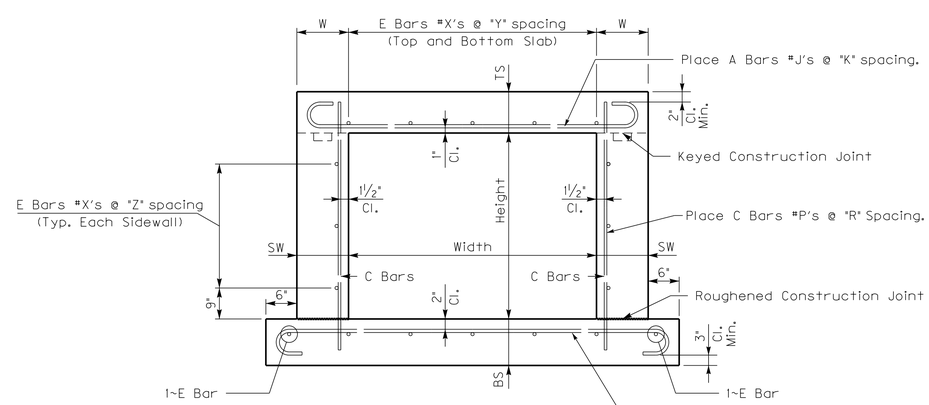

TYPICAL BARREL SECTION

DRAWN E. Downey DATE 11/2017
CHECKED J. Van Zee 11/2017
RECOMMENDED
APPROVED F.H.W.A.
REVISED BY

KENTUCKY
DEPARTMENT OF HIGHWAYS

STANDARD CULVERT
4'-0" WIDTH

STANDARD DRAWING NO. B__-001-01

SUBMITTED _____ 11-01-17
DIRECTOR DIVISION OF STRUCTURAL DESIGN — DATE

APPROVED _____ 11-01-17
STATE HIGHWAY ENGINEER — DATE

6'-0" Width x 4'-0" Height

Fill Height (Ft.)	Top Slab										Bottom Slab										Sidewall						Mark "E" Distribution				Quantities	
	TS	J	K	Mark	Type	Length	A	B	C	D	BS	M	N	Mark	Type	Length	A	B	C	D	SW	P	R	Mark	Type	Length	W	X	Y	Z	Concrete CY/LF	Steel LBS/LF
0-2	9"	5	5"	A	1	8- 7	6-11	0-10	0- 5	7- 4	10"	5	5"	B	1	9- 7	7-11	0-10	0- 5	8- 4	10"	5	12"	C	Str	5- 2	10"	5	12"	12"	0.73	82
2.01-5	9"	5	5"	A	1	8- 7	6-11	0-10	0- 5	7- 4	10"	5	5"	B	1	9- 7	7-11	0-10	0- 5	8- 4	10"	5	12"	C	Str	5- 2	10"	5	12"	12"	0.73	82
5-10	8"	5	6"	A	1	8- 7	6-11	0-10	0- 5	7- 4	9"	5	6"	B	1	9- 7	7-11	0-10	0- 5	8- 4	10"	5	12"	C	Str	5- 0	10"	5	12"	12"	0.68	74
10-15	9"	5	5"	A	1	8- 7	6-11	0-10	0- 5	7- 4	10"	5	5"	B	1	9- 7	7-11	0-10	0- 5	8- 4	10"	5	12"	C	Str	5- 2	10"	5	12"	12"	0.73	82
15-20	9"	6	5"	A	1	8-10	6-10	1- 0	0- 6	7- 4	10"	6	5"	B	1	9-10	7-10	1- 0	0- 6	8- 4	10"	5	12"	C	Str	5- 2	10"	5	12"	12"	0.73	104
20-25	10"	6	5"	A	1	8-10	6-10	1- 0	0- 6	7- 4	11"	6	5"	B	1	9-10	7-10	1- 0	0- 6	8- 4	10"	5	12"	C	Str	5- 4	10"	5	12"	12"	0.78	104
25-30	11"	7	6"	A	1	9- 1	6- 9	1- 2	0- 7	7- 4	12"	7	6"	B	1	10- 1	7- 9	1- 2	0- 7	8- 4	10"	5	12"	C	Str	5- 6	10"	5	12"	12"	0.83	115
30-35	12"	8	6"	A	1	9- 2	6- 8	1- 3	0- 8	7- 4	13"	8	6"	B	1	10- 2	7- 8	1- 3	0- 8	8- 4	10"	5	12"	C	Str	5- 8	10"	5	12"	12"	0.88	141
35-40	13"	8	5"	A	1	9- 2	6- 8	1- 3	0- 8	7- 4	14"	8	5"	B	1	10- 2	7- 8	1- 3	0- 8	8- 4	10"	5	12"	C	Str	5-10	10"	5	12"	12"	0.93	162

6'-0" Width x 6'-0" Height

Fill Height (Ft.)	Top Slab										Bottom Slab										Sidewall						Mark "E" Distribution				Quantities	
	TS	J	K	Mark	Type	Length	A	B	C	D	BS	M	N	Mark	Type	Length	A	B	C	D	SW	P	R	Mark	Type	Length	W	X	Y	Z	Concrete CY/LF	Steel LBS/LF
0-2	9"	5	5"	A	1	8- 7	6-11	0-10	0- 5	7- 4	10"	5	5"	B	1	9- 7	7-11	0-10	0- 5	8- 4	10"	5	12"	C	Str	7- 2	10"	5	12"	12"	0.86	90
2.01-5	9"	5	5"	A	1	8- 7	6-11	0-10	0- 5	7- 4	10"	5	5"	B	1	9- 7	7-11	0-10	0- 5	8- 4	10"	5	12"	C	Str	7- 2	10"	5	12"	12"	0.86	90
5-10	8"	5	6"	A	1	8- 7	6-11	0-10	0- 5	7- 4	9"	5	6"	B	1	9- 7	7-11	0-10	0- 5	8- 4	10"	5	12"	C	Str	7- 0	10"	5	12"	12"	0.81	82
10-15	9"	5	5"	A	1	8- 7	6-11	0-10	0- 5	7- 4	10"	5	5"	B	1	9- 7	7-11	0-10	0- 5	8- 4	10"	5	12"	C	Str	7- 2	10"	5	12"	12"	0.86	90
15-20	9"	6	5"	A	1	8-10	6-10	1- 0	0- 6	7- 4	10"	6	5"	B	1	9-10	7-10	1- 0	0- 6	8- 4	10"	5	11"	C	Str	7- 2	10"	5	12"	12"	0.86	113
20-25	10"	6	5"	A	1	8-10	6-10	1- 0	0- 6	7- 4	11"	6	5"	B	1	9-10	7-10	1- 0	0- 6	8- 4	10"	5	10"	C	Str	7- 4	10"	5	12"	12"	0.91	115
25-30	11"	7	5"	A	1	9- 1	6- 9	1- 2	0- 7	7- 4	12"	7	5"	B	1	10- 1	7- 9	1- 2	0- 7	8- 4	10"	5	9"	C	Str	7- 6	10"	5	12"	12"	0.96	145
30-35	12"	8	5"	A	1	9- 2	6- 8	1- 3	0- 8	7- 4	13"	8	5"	B	1	10- 2	7- 8	1- 3	0- 8	8- 4	10"	5	8"	C	Str	7- 8	10"	5	12"	12"	1.01	178
35-40	14"	7	5"	A	1	9- 1	6- 9	1- 2	0- 7	7- 4	15"	7	5"	B	1	10- 1	7- 9	1- 2	0- 7	8- 4	10"	5	7"	C	Str	8- 0	10"	5	12"	12"	1.11	152

6'-0" Width x 8'-0" Height

Fill Height (Ft.)	Top Slab										Bottom Slab										Sidewall						Mark "E" Distribution				Quantities	
	TS	J	K	Mark	Type	Length	A	B	C	D	BS	M	N	Mark	Type	Length	A	B	C	D	SW	P	R	Mark	Type	Length	W	X	Y	Z	Concrete CY/LF	Steel LBS/LF
0-2	9"	5	5"	A	1	8- 7	6-11	0-10	0- 5	7- 4	10"	5	5"	B	1	9- 7	7-11	0-10	0- 5	8- 4	10"	5	12"	C	Str	9- 2	10"	5	12"	12"	0.98	99
2.01-5	9"	5	5"	A	1	8- 7	6-11	0-10	0- 5	7- 4	10"	5	5"	B	1	9- 7	7-11	0-10	0- 5	8- 4	10"	5	12"	C	Str	9- 2	10"	5	12"	12"	0.98	99
5-10	8"	5	5"	A	1	8- 7	6-11	0-10	0- 5	7- 4	9"	5	5"	B	1	9- 7	7-11	0-10	0- 5	8- 4	10"	5	10"	C	Str	9- 0	10"	5	12"	12"	0.93	102
10-15	9"	5	5"	A	1	8- 7	6-11	0-10	0- 5	7- 4	10"	5	5"	B	1	9- 7	7-11	0-10	0- 5	8- 4	10"	5	9"	C	Str	9- 2	10"	5	12"	12"	0.98	105
15-20	9"	6	5"	A	1	8-10	6-10	1- 0	0- 6	7- 4	10"	6	5"	B	1	9-10	7-10	1- 0	0- 6	8- 4	10"	5	8"	C	Str	9- 2	10"	5	12"	12"	0.98	130
20-25	10"	6	5"	A	1	8-10	6-10	1- 0	0- 6	7- 4	11"	6	5"	B	1	9-10	7-10	1- 0	0- 6	8- 4	10"	5	7"	C	Str	9- 4	10"	5	12"	12"	1.03	135
25-30	11"	8	6"	A	1	9- 2	6- 8	1- 3	0- 8	7- 4	12"	8	6"	B	1	10- 2	7- 8	1- 3	0- 8	8- 4	10"	5	6"	C	Str	9- 6	10"	5	12"	12"	1.08	177
30-35	12"	8	5"	A	1	9- 2	6- 8	1- 3	0- 8	7- 4	13"	8	5"	B	1	10- 2	7- 8	1- 3	0- 8	8- 4	10"	5	5"	C	Str	9- 8	10"	5	12"	12"	1.13	206
35-40	14"	8	5"	A	1	9- 2	6- 8	1- 3	0- 8	7- 4	15"	8	5"	B	1	10- 2	7- 8	1- 3	0- 8	8- 4	10"	6	6"	C	Str	10- 0	10"	5	12"	12"	1.23	218

NOTE:
A & B bars may need to be rotated to maintain shown clearances.

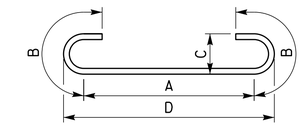

TYPE 1

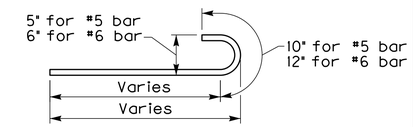

TYPE 4

NOTE:
Bar Dimensions are per bar.

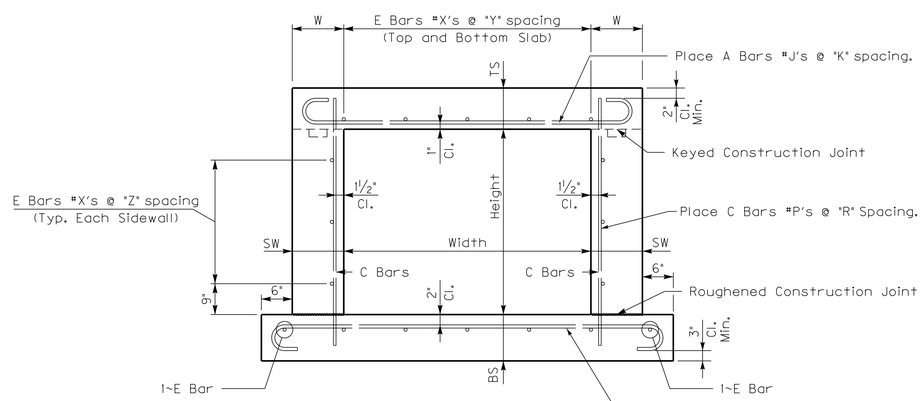

TYPICAL BARREL SECTION

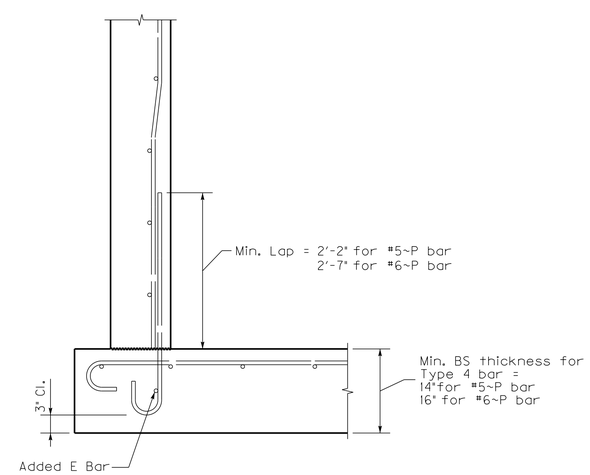

OPTIONAL HOOK DETAIL

NOTE:
The contractor will not be paid additionally if optional hook detail is used.

KENTUCKY
DEPARTMENT OF HIGHWAYS

STANDARD CULVERT
6'-0" WIDTH

STANDARD DRAWING NO. B__-002-01

SUBMITTED _____ DIRECTOR DIVISION OF STRUCTURAL DESIGN — DATE 11-01-17

APPROVED _____ STATE HIGHWAY ENGINEER — DATE 11-01-17

DRAWN E. Downey — DATE 11/2017
CHECKED J. Van Zee — 11/2017
RECOMMENDED
APPROVED F.H.W.A.
REVISED BY

8'-0" Width x 4'-0" Height

Fill Height (Ft.)	Top Slab										Bottom Slab										Sidewall						Mark "E" Distribution				Quantities	
	TS	J	K	Mark	Type	Length	A	B	C	D	BS	M	N	Mark	Type	Length	A	B	C	D	SW	P	R	Mark	Type	Length	W	X	Y	Z	Concrete CY/LF	Steel LBS/LF
0-2	10"	6	6"	A	1	10-10	8-10	1- 0	0- 6	9- 4	11"	6	6"	B	1	11-10	9-10	1- 0	0- 6	10- 4	10"	5	12"	C	Str	5- 4	10"	5	12"	12"	0.91	109
2.01-5	10"	6	5"	A	1	10-10	8-10	1- 0	0- 6	9- 4	11"	6	5"	B	1	11-10	9-10	1- 0	0- 6	10- 4	10"	5	12"	C	Str	5- 4	10"	5	12"	12"	0.91	123
5-10	10"	5	5"	A	1	10- 7	8-11	0-10	0- 5	9- 4	11"	5	5"	B	1	11- 7	9-11	0-10	0- 5	10- 4	10"	5	12"	C	Str	5- 4	10"	5	12"	12"	0.91	96
10-15	10"	6	5"	A	1	10-10	8-10	1- 0	0- 6	9- 4	11"	6	5"	B	1	11-10	9-10	1- 0	0- 6	10- 4	10"	5	12"	C	Str	5- 4	10"	5	12"	12"	0.91	123
15-20	10"	7	5"	A	1	11- 1	8- 9	1- 2	0- 7	9- 4	11"	7	5"	B	1	12- 1	9- 9	1- 2	0- 7	10- 4	10"	5	12"	C	Str	5- 4	10"	5	12"	12"	0.91	155
20-25	12"	7	5"	A	1	11- 1	8- 9	1- 2	0- 7	9- 4	13"	7	5"	B	1	12- 1	9- 9	1- 2	0- 7	10- 4	10"	5	12"	C	Str	5- 8	10"	5	12"	12"	1.04	155
25-30	13"	8	5"	A	1	11- 2	8- 8	1- 3	0- 8	9- 4	14"	8	5"	B	1	12- 2	9- 8	1- 3	0- 8	10- 4	10"	5	12"	C	Str	5-10	10"	5	12"	12"	1.10	192
30-35	15"	8	5"	A	1	11- 2	8- 8	1- 3	0- 8	9- 4	16"	8	5"	B	1	12- 2	9- 8	1- 3	0- 8	10- 4	10"	5	12"	C	Str	6- 2	10"	5	12"	12"	1.23	192
35-40	16"	9	5"	A	1	12- 2	8- 4¼	1-11	0-11¾	9- 4	17"	9	5"	B	1	13- 2	9- 4¼	1-11	0-11¾	10- 4	10"	5	11"	C	Str	6- 4	10"	5	12"	12"	1.29	251

8'-0" Width x 6'-0" Height

Fill Height (Ft.)	Top Slab										Bottom Slab										Sidewall						Mark "E" Distribution				Quantities	
	TS	J	K	Mark	Type	Length	A	B	C	D	BS	M	N	Mark	Type	Length	A	B	C	D	SW	P	R	Mark	Type	Length	W	X	Y	Z	Concrete CY/LF	Steel LBS/LF
0-2	10"	6	6"	A	1	10-10	8-10	1- 0	0- 6	9- 4	11"	6	6"	B	1	11-10	9-10	1- 0	0- 6	10- 4	10"	5	12"	C	Str	7- 4	10"	5	12"	12"	1.04	117
2.01-5	10"	6	5"	A	1	10-10	8-10	1- 0	0- 6	9- 4	11"	6	5"	B	1	11-10	9-10	1- 0	0- 6	10- 4	10"	5	12"	C	Str	7- 4	10"	5	12"	12"	1.04	131
5-10	10"	5	5"	A	1	10- 7	8-11	0-10	0- 5	9- 4	11"	5	5"	B	1	11- 7	9-11	0-10	0- 5	10- 4	10"	5	12"	C	Str	7- 4	10"	5	12"	12"	1.04	105
10-15	10"	6	5"	A	1	10-10	8-10	1- 0	0- 6	9- 4	11"	6	5"	B	1	11-10	9-10	1- 0	0- 6	10- 4	10"	5	12"	C	Str	7- 4	10"	5	12"	12"	1.04	131
15-20	10"	7	5"	A	1	11- 1	8- 9	1- 2	0- 7	9- 4	11"	7	5"	B	1	12- 1	9- 9	1- 2	0- 7	10- 4	10"	5	11"	C	Str	7- 4	10"	5	12"	12"	1.04	164
20-25	12"	7	5"	A	1	11- 1	8- 9	1- 2	0- 7	9- 4	13"	7	5"	B	1	12- 1	9- 9	1- 2	0- 7	10- 4	10"	5	9"	C	Str	7- 8	10"	5	12"	12"	1.16	169
25-30	14"	8	6"	A	1	11- 2	8- 8	1- 3	0- 8	9- 4	15"	8	6"	B	1	12- 2	9- 8	1- 3	0- 8	10- 4	10"	5	8"	C	Str	8- 0	10"	5	12"	12"	1.29	184
30-35	15"	9	5"	A	1	12- 2	8- 4¼	1-11	0-11¾	9- 4	16"	9	5"	B	1	13- 2	9- 4¼	1-11	0-11¾	10- 4	10"	5	8"	C	Str	8- 2	10"	5	12"	12"	1.35	266
35-40	17"	10	7"	A	1	12- 7	8- 2¾	2- 2	1- 1¼	9- 4	18"	10	7"	B	1	13- 7	9- 2¾	2- 2	1- 1¼	10- 4	10"	5	7"	C	Str	8- 6	10"	5	12"	12"	1.48	258

8'-0" Width x 8'-0" Height

Fill Height (Ft.)	Top Slab										Bottom Slab										Sidewall						Mark "E" Distribution				Quantities	
	TS	J	K	Mark	Type	Length	A	B	C	D	BS	M	N	Mark	Type	Length	A	B	C	D	SW	P	R	Mark	Type	Length	W	X	Y	Z	Concrete CY/LF	Steel LBS/LF
0-2	10"	6	6"	A	1	10-10	8-10	1- 0	0- 6	9- 4	11"	6	6"	B	1	11-10	9-10	1- 0	0- 6	10- 4	10"	5	12"	C	Str	9- 4	10"	5	12"	12"	1.16	126
2.01-5	10"	6	5"	A	1	10-10	8-10	1- 0	0- 6	9- 4	11"	6	5"	B	1	11-10	9-10	1- 0	0- 6	10- 4	10"	5	12"	C	Str	9- 4	10"	5	12"	12"	1.16	139
5-10	10"	5	5"	A	1	10- 7	8-11	0-10	0- 5	9- 4	11"	5	5"	B	1	11- 7	9-11	0-10	0- 5	10- 4	10"	5	10"	C	Str	9- 4	10"	5	12"	12"	1.16	117
10-15	10"	6	5"	A	1	10-10	8-10	1- 0	0- 6	9- 4	11"	6	5"	B	1	11-10	9-10	1- 0	0- 6	10- 4	10"	5	9"	C	Str	9- 4	10"	5	12"	12"	1.16	146
15-20	11"	7	5"	A	1	11- 1	8- 9	1- 2	0- 7	9- 4	12"	7	5"	B	1	12- 1	9- 9	1- 2	0- 7	10- 4	10"	5	7"	C	Str	9- 6	10"	5	12"	12"	1.22	186
20-25	12"	8	5"	A	1	11- 2	8- 8	1- 3	0- 8	9- 4	13"	8	5"	B	1	12- 2	9- 8	1- 3	0- 8	10- 4	10"	5	7"	C	Str	9- 8	10"	5	12"	12"	1.28	222
25-30	14"	8	5"	A	1	11- 2	8- 8	1- 3	0- 8	9- 4	15"	8	5"	B	1	12- 2	9- 8	1- 3	0- 8	10- 4	10"	5	5"	C	Str	10- 0	10"	5	12"	12"	1.41	238
30-35	15"	9	5"	A	1	12- 2	8- 4¼	1-11	0-11¾	9- 4	16"	9	5"	B	1	13- 2	9- 4¼	1-11	0-11¾	10- 4	10"	6	6"	C	Str	10- 2	10"	5	12"	12"	1.47	306
35-40	17"	9	5"	A	1	12- 2	8- 4¼	1-11	0-11¾	9- 4	18"	9	5"	B	1	13- 2	9- 4¼	1-11	0-11¾	10- 4	10"	6	5"	C	Str	10- 6	10"	5	12"	12"	1.60	321

NOTE:
A & B bars may need to be rotated to maintain shown clearances.

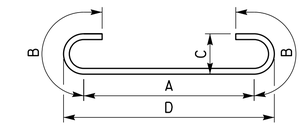

TYPE 1

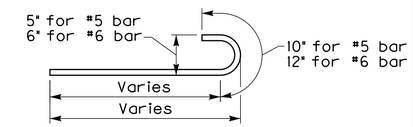

TYPE 4

NOTE:
Bar Dimensions are per bar.

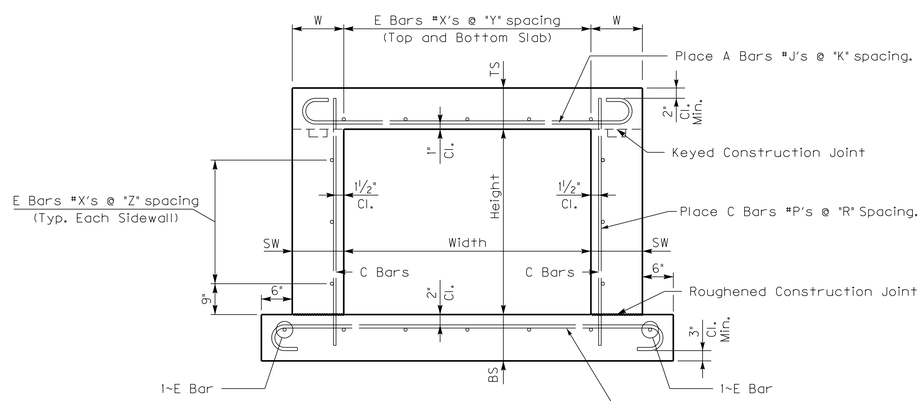

TYPICAL BARREL SECTION

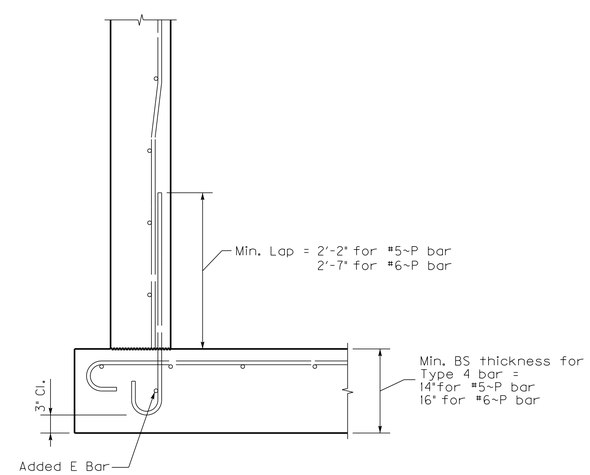

OPTIONAL HOOK DETAIL

NOTE:
The contractor will not be paid additionally if optional hook detail is used.

DRAWN E. Downey DATE 11/2017
CHECKED J. Van Zee 11/2017
RECOMMENDED
APPROVED F.H.W.A.
REVISED BY

KENTUCKY
DEPARTMENT OF HIGHWAYS

STANDARD CULVERT
8'-0" WIDTH

STANDARD DRAWING NO. B__-003-01

SUBMITTED _____ DIRECTOR DIVISION OF STRUCTURAL DESIGN — 11-01-17 DATE

APPROVED _____ STATE HIGHWAY ENGINEER — 11-01-17 DATE

10'-0" Width x 4'-0" Height

Fill Height (Ft.)	Top Slab										Bottom Slab										Sidewall						Mark "E" Distribution				Quantities	
	TS	J	K	Mark	Type	Length	A	B	C	D	BS	M	N	Mark	Type	Length	A	B	C	D	SW	P	R	Mark	Type	Length	W	X	Y	Z	Concrete CY/LF	Steel LBS/LF
0-2	10"	7	6"	A	1	13- 1	10- 9	1- 2	0- 7	11- 4	11"	7	6"	B	1	14- 1	11- 9	1- 2	0- 7	12- 4	10"	5	12"	C	Str	5- 4	10"	5	10"	12"	1.04	160
2.01-5	10"	7	5"	A	1	13- 1	10- 9	1- 2	0- 7	11- 4	11"	7	5"	B	1	14- 1	11- 9	1- 2	0- 7	12- 4	10"	5	12"	C	Str	5- 4	10"	5	12"	12"	1.04	178
5-10	10"	7	5"	A	1	13- 1	10- 9	1- 2	0- 7	11- 4	11"	7	5"	B	1	14- 1	11- 9	1- 2	0- 7	12- 4	10"	5	12"	C	Str	5- 4	10"	5	12"	12"	1.04	178
10-15	10"	7	5"	A	1	13- 1	10- 9	1- 2	0- 7	11- 4	11"	7	5"	B	1	14- 1	11- 9	1- 2	0- 7	12- 4	10"	5	12"	C	Str	5- 4	10"	5	12"	12"	1.04	178
15-20	12"	7	5"	A	1	13- 1	10- 9	1- 2	0- 7	11- 4	13"	7	5"	B	1	14- 1	11- 9	1- 2	0- 7	12- 4	10"	5	12"	C	Str	5- 8	10"	5	12"	12"	1.19	179
20-25	14"	8	5"	A	1	13- 2	10- 8	1- 3	0- 8	11- 4	15"	8	5"	B	1	14- 2	11- 8	1- 3	0- 8	12- 4	10"	5	12"	C	Str	6- 0	10"	5	12"	12"	1.34	222
25-30	16"	9	6"	A	1	14- 2	10- 4¼	1-11	0-11¾	11- 4	17"	9	6"	B	1	15- 2	11- 4¼	1-11	0-11¾	12- 4	10"	5	12"	C	Str	6- 4	10"	5	12"	12"	1.49	247
30-35	17"	10	5"	A	1	14- 7	10- 2¾	2- 2	1- 1¼	11- 4	18"	10	5"	B	1	15- 7	11- 2¾	2- 2	1- 1¼	12- 4	10"	5	12"	C	Str	6- 6	10"	5	12"	12"	1.57	360
35-40	18"	11	5"	A	1	15- 3	10- 5¼	2- 5	1- 2¾	11- 8	19"	11	5"	B	1	16- 3	11- 5¼	2- 5	1- 2¾	12- 8	12"	5	12"	C	Str	6- 8	12"	5	12"	12"	1.73	449

10'-0" Width x 6'-0" Height

Fill Height (Ft.)	Top Slab										Bottom Slab										Sidewall						Mark "E" Distribution				Quantities	
	TS	J	K	Mark	Type	Length	A	B	C	D	BS	M	N	Mark	Type	Length	A	B	C	D	SW	P	R	Mark	Type	Length	W	X	Y	Z	Concrete CY/LF	Steel LBS/LF
0-2	10"	7	6"	A	1	13- 1	10- 9	1- 2	0- 7	11- 4	11"	7	6"	B	1	14- 1	11- 9	1- 2	0- 7	12- 4	10"	5	12"	C	Str	7- 4	10"	5	10"	12"	1.17	169
2.01-5	10"	7	5"	A	1	13- 1	10- 9	1- 2	0- 7	11- 4	11"	7	5"	B	1	14- 1	11- 9	1- 2	0- 7	12- 4	10"	5	12"	C	Str	7- 4	10"	5	12"	12"	1.17	187
5-10	10"	7	5"	A	1	13- 1	10- 9	1- 2	0- 7	11- 4	11"	7	5"	B	1	14- 1	11- 9	1- 2	0- 7	12- 4	10"	5	12"	C	Str	7- 4	10"	5	12"	12"	1.17	187
10-15	10"	7	5"	A	1	13- 1	10- 9	1- 2	0- 7	11- 4	11"	7	5"	B	1	14- 1	11- 9	1- 2	0- 7	12- 4	10"	5	12"	C	Str	7- 4	10"	5	12"	12"	1.17	187
15-20	12"	8	5"	A	1	13- 2	10- 8	1- 3	0- 8	11- 4	13"	8	5"	B	1	14- 2	11- 8	1- 3	0- 8	12- 4	10"	5	11"	C	Str	7- 8	10"	5	12"	12"	1.32	231
20-25	14"	8	5"	A	1	13- 2	10- 8	1- 3	0- 8	11- 4	15"	8	5"	B	1	14- 2	11- 8	1- 3	0- 8	12- 4	10"	5	9"	C	Str	8- 0	10"	5	12"	12"	1.47	236
25-30	16"	9	5"	A	1	14- 2	10- 4¼	1-11	0-11¾	11- 4	17"	9	5"	B	1	15- 2	11- 4¼	1-11	0-11¾	12- 4	10"	5	8"	C	Str	8- 4	10"	5	12"	12"	1.62	304
30-35	17"	10	5"	A	1	14- 7	10- 2¾	2- 2	1- 1¼	11- 4	18"	10	5"	B	1	15- 7	11- 2¾	2- 2	1- 1¼	12- 4	10"	5	7"	C	Str	8- 6	10"	5	12"	12"	1.69	381
35-40	19"	11	5"	A	1	15- 3	10- 5¼	2- 5	1- 2¾	11- 8	20"	11	5"	B	1	16- 3	11- 5¼	2- 5	1- 2¾	12- 8	12"	5	8"	C	Str	8-10	12"	5	12"	12"	1.96	467

10'-0" Width x 8'-0" Height

Fill Height (Ft.)	Top Slab										Bottom Slab										Sidewall						Mark "E" Distribution				Quantities	
	TS	J	K	Mark	Type	Length	A	B	C	D	BS	M	N	Mark	Type	Length	A	B	C	D	SW	P	R	Mark	Type	Length	W	X	Y	Z	Concrete CY/LF	Steel LBS/LF
0-2	10"	7	6"	A	1	13- 1	10- 9	1- 2	0- 7	11- 4	11"	7	6"	B	1	14- 1	11- 9	1- 2	0- 7	12- 4	10"	5	12"	C	Str	9- 4	10"	5	10"	12"	1.29	177
2.01-5	10"	7	5"	A	1	13- 1	10- 9	1- 2	0- 7	11- 4	11"	7	5"	B	1	14- 1	11- 9	1- 2	0- 7	12- 4	10"	5	12"	C	Str	9- 4	10"	5	12"	12"	1.29	195
5-10	10"	7	5"	A	1	13- 1	10- 9	1- 2	0- 7	11- 4	11"	7	5"	B	1	14- 1	11- 9	1- 2	0- 7	12- 4	10"	5	10"	C	Str	9- 4	10"	5	12"	12"	1.29	199
10-15	10"	7	5"	A	1	13- 1	10- 9	1- 2	0- 7	11- 4	11"	7	5"	B	1	14- 1	11- 9	1- 2	0- 7	12- 4	10"	5	9"	C	Str	9- 4	10"	5	12"	12"	1.29	202
15-20	12"	8	5"	A	1	13- 2	10- 8	1- 3	0- 8	11- 4	13"	8	5"	B	1	14- 2	11- 8	1- 3	0- 8	12- 4	10"	5	8"	C	Str	9- 8	10"	5	12"	12"	1.44	248
20-25	15"	8	6"	A	1	13- 2	10- 8	1- 3	0- 8	11- 4	16"	8	6"	B	1	14- 2	11- 8	1- 3	0- 8	12- 4	10"	5	7"	C	Str	10- 2	10"	5	12"	12"	1.66	225
25-30	16"	9	5"	A	1	14- 2	10- 4¼	1-11	0-11¾	11- 4	17"	9	5"	B	1	15- 2	11- 4¼	1-11	0-11¾	12- 4	10"	5	5"	C	Str	10- 4	10"	5	12"	12"	1.74	333
30-35	18"	10	5"	A	1	14-11	10- 6¾	2- 2	1- 1¼	11- 8	19"	10	5"	B	1	15-11	11- 6¾	2- 2	1- 1¼	12- 8	12"	5	6"	C	Str	10- 8	12"	5	12"	12"	2.03	406
35-40	19"	11	5"	A	1	15- 3	10- 5¼	2- 5	1- 2¾	11- 8	20"	11	5"	B	1	16- 3	11- 5¼	2- 5	1- 2¾	12- 8	12"	5	5"	C	Str	10-10	12"	5	12"	12"	2.10	498

10'-0" Width x 10'-0" Height

Fill Height (Ft.)	Top Slab										Bottom Slab										Sidewall						Mark "E" Distribution				Quantities	
	TS	J	K	Mark	Type	Length	A	B	C	D	BS	M	N	Mark	Type	Length	A	B	C	D	SW	P	R	Mark	Type	Length	W	X	Y	Z	Concrete CY/LF	Steel LBS/LF
0-2	10"	7	6"	A	1	13- 1	10- 9	1- 2	0- 7	11- 4	11"	7	6"	B	1	14- 1	11- 9	1- 2	0- 7	12- 4	10"	5	11"	C	Str	11- 4	10"	5	10"	12"	1.41	188
2.01-5	10"	7	5"	A	1	13- 1	10- 9	1- 2	0- 7	11- 4	11"	7	5"	B	1	14- 1	11- 9	1- 2	0- 7	12- 4	10"	5	9"	C	Str	11- 4	10"	5	12"	12"	1.41	211
5-10	10"	7	5"	A	1	13- 1	10- 9	1- 2	0- 7	11- 4	11"	7	5"	B	1	14- 1	11- 9	1- 2	0- 7	12- 4	10"	5	7"	C	Str	11- 4	10"	5	12"	12"	1.41	220
10-15	11"	7	5"	A	1	13- 1	10- 9	1- 2	0- 7	11- 4	12"	7	5"	B	1	14- 1	11- 9	1- 2	0- 7	12- 4	10"	5	6"	C	Str	11- 6	10"	5	12"	12"	1.49	228
15-20	13"	7	5"	A	1	13- 1	10- 9	1- 2	0- 7	11- 4	14"	7	5"	B	1	14- 1	11- 9	1- 2	0- 7	12- 4	10"	6	7"	C	Str	11-10	10"	5	12"	12"	1.64	241
20-25	15"	8	5"	A	1	13- 6	11- 0	1- 3	0- 8	11- 8	16"	8	5"	B	1	14- 6	12- 0	1- 3	0- 8	12- 8	12"	6	7"	C	Str	12- 2	12"	5	12"	12"	1.94	289
25-30	17"	10	7"	A	1	14-11	10- 6¾	2- 2	1- 1¼	11- 8	18"	10	7"	B	1	15-11	11- 6¾	2- 2	1- 1¼	12- 8	12"	6	6"	C	Str	12- 6	12"	5	12"	12"	2.10	349
30-35	18"	10	5"	A	1	15- 5	11- 0¾	2- 2	1- 1¼	12- 2	19"	10	5"	B	1	16- 5	12- 0¾	2- 2	1- 1¼	13- 2	15"	6	7"	C	Str	12- 8	15"	5	12"	12"	2.42	441
35-40	20"	11	5"	A	1	15- 9	10-11¼	2- 5	1- 2¾	12- 2	21"	11	5"	B	1	16- 9	11-11¼	2- 5	1- 2¾	13- 2	15"	6	6"	C	Str	13- 0	15"	5	12"	12"	2.58	539

NOTE:
Bar Dimensions are per bar.

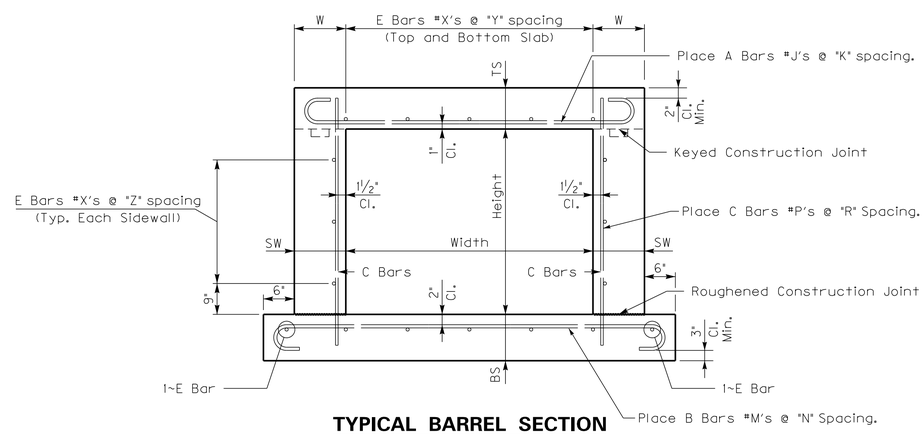

TYPICAL BARREL SECTION

NOTE:
A & B bars may need to be rotated to maintain shown clearances.

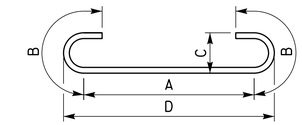

TYPE 1

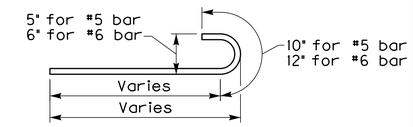

TYPE 4

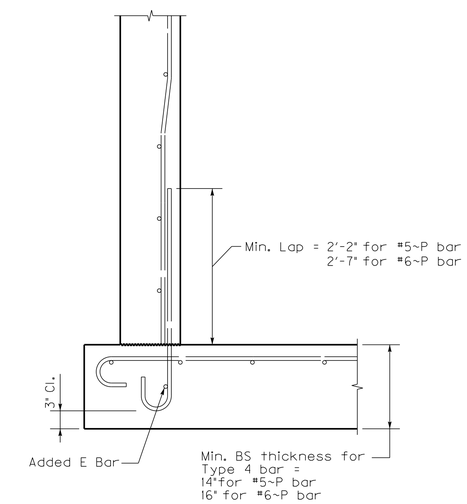

OPTIONAL HOOK DETAIL

NOTE:
The contractor will not be paid additionally if optional hook detail is used.

DRAWN E. Downey DATE 11/2017
CHECKED J. Van Zee 11/2017
RECOMMENDED
APPROVED F.H.W.A.
REVISED BY

KENTUCKY
DEPARTMENT OF HIGHWAYS

STANDARD CULVERT
10'-0" WIDTH

STANDARD DRAWING NO. B__-004-01

SUBMITTED _____ DIRECTOR DIVISION OF STRUCTURAL DESIGN — 11-01-17 DATE

APPROVED _____ STATE HIGHWAY ENGINEER — 11-01-17 DATE

12'-0" Width x 4'-0" Height

Fill Height (Ft.)	Top Slab										Bottom Slab										Sidewall						Mark "E" Distribution				Quantities	
	TS	J	K	Mark	Type	Length	A	B	C	D	BS	M	N	Mark	Type	Length	A	B	C	D	SW	P	R	Mark	Type	Length	W	X	Y	Z	Concrete CY/LF	Steel LBS/LF
0-2	11"	7	5"	A	1	15- 1	12- 9	1- 2	0- 7	13- 4	12"	7	5"	B	1	16- 1	13- 9	1- 2	0- 7	14- 4	10"	5	12"	C	Str	5- 6	12"	5	10"	12"	1.26	207
2.01-5	11"	7	5"	A	1	15- 1	12- 9	1- 2	0- 7	13- 4	12"	7	5"	B	1	16- 1	13- 9	1- 2	0- 7	14- 4	10"	5	12"	C	Str	5- 6	10"	5	12"	12"	1.26	203
5-10	11"	8	5"	A	1	15- 2	12- 8	1- 3	0- 8	13- 4	12"	8	5"	B	1	16- 2	13- 8	1- 3	0- 8	14- 4	10"	5	12"	C	Str	5- 6	10"	5	12"	12"	1.26	250
10-15	11"	8	5"	A	1	15- 2	12- 8	1- 3	0- 8	13- 4	12"	8	5"	B	1	16- 2	13- 8	1- 3	0- 8	14- 4	10"	5	12"	C	Str	5- 6	10"	5	12"	12"	1.26	250
15-20	14"	8	5"	A	1	15- 2	12- 8	1- 3	0- 8	13- 4	15"	8	5"	B	1	16- 2	13- 8	1- 3	0- 8	14- 4	10"	5	12"	C	Str	6- 0	10"	5	12"	12"	1.52	252
20-25	16"	9	6"	A	1	16- 2	12- 4¼	1-11	0-11¾	13- 4	17"	9	6"	B	1	17- 2	13- 4¼	1-11	0-11¾	14- 4	10"	5	12"	C	Str	6- 4	10"	5	12"	12"	1.70	278
25-30	17"	10	5"	A	1	16- 7	12- 2¾	2- 2	1- 1¼	13- 4	18"	10	5"	B	1	17- 7	13- 2¾	2- 2	1- 1¼	14- 4	10"	5	12"	C	Str	6- 6	10"	5	12"	12"	1.78	405
30-35	19"	11	5"	A	1	17- 3	12- 5¼	2- 5	1- 2¾	13- 8	20"	11	5"	B	1	18- 3	13- 5¼	2- 5	1- 2¾	14- 8	12"	5	12"	C	Str	6-10	12"	5	12"	12"	2.05	505
35-40	22"	11	5"	A	1	17- 9	12-11¼	2- 5	1- 2¾	14- 2	23"	11	5"	B	1	18- 9	13-11¼	2- 5	1- 2¾	15- 2	15"	5	12"	C	Str	7- 4	15"	5	12"	12"	2.46	519

12'-0" Width x 6'-0" Height

Fill Height (Ft.)	Top Slab										Bottom Slab										Sidewall						Mark "E" Distribution				Quantities	
	TS	J	K	Mark	Type	Length	A	B	C	D	BS	M	N	Mark	Type	Length	A	B	C	D	SW	P	R	Mark	Type	Length	W	X	Y	Z	Concrete CY/LF	Steel LBS/LF
0-2	11"	7	5"	A	1	15- 1	12- 9	1- 2	0- 7	13- 4	12"	7	5"	B	1	16- 1	13- 9	1- 2	0- 7	14- 4	10"	5	12"	C	Str	7- 6	12"	5	10"	12"	1.38	215
2.01-5	11"	7	5"	A	1	15- 1	12- 9	1- 2	0- 7	13- 4	12"	7	5"	B	1	16- 1	13- 9	1- 2	0- 7	14- 4	10"	5	12"	C	Str	7- 6	10"	5	12"	12"	1.38	211
5-10	11"	8	5"	A	1	15- 2	12- 8	1- 3	0- 8	13- 4	12"	8	5"	B	1	16- 2	13- 8	1- 3	0- 8	14- 4	10"	5	12"	C	Str	7- 6	10"	5	12"	12"	1.38	259
10-15	11"	8	5"	A	1	15- 2	12- 8	1- 3	0- 8	13- 4	12"	8	5"	B	1	16- 2	13- 8	1- 3	0- 8	14- 4	10"	5	12"	C	Str	7- 6	10"	5	12"	12"	1.38	259
15-20	14"	8	5"	A	1	15- 2	12- 8	1- 3	0- 8	13- 4	15"	8	5"	B	1	16- 2	13- 8	1- 3	0- 8	14- 4	10"	5	10"	C	Str	8- 0	10"	5	12"	12"	1.64	263
20-25	16"	9	5"	A	1	16- 2	12- 4¼	1-11	0-11¾	13- 4	17"	9	5"	B	1	17- 2	13- 4¼	1-11	0-11¾	14- 4	10"	5	9"	C	Str	8- 4	10"	5	12"	12"	1.82	337
25-30	18"	10	5"	A	1	16-11	12- 6¾	2- 2	1- 1¼	13- 8	19"	10	5"	B	1	17-11	13- 6¾	2- 2	1- 1¼	14- 8	12"	5	9"	C	Str	8- 8	12"	5	12"	12"	2.11	427
30-35	20"	11	5"	A	1	17- 3	12- 5¼	2- 5	1- 2¾	13- 8	21"	11	5"	B	1	18- 3	13- 5¼	2- 5	1- 2¾	14- 8	12"	5	8"	C	Str	9- 0	12"	5	12"	12"	2.29	523
35-40	23"	11	5"	A	1	17- 9	12-11¼	2- 5	1- 2¾	14- 2	24"	11	5"	B	1	18- 9	13-11¼	2- 5	1- 2¾	15- 2	15"	5	8"	C	Str	9- 6	15"	5	12"	12"	2.74	537

12'-0" Width x 8'-0" Height

Fill Height (Ft.)	Top Slab										Bottom Slab										Sidewall						Mark "E" Distribution				Quantities	
	TS	J	K	Mark	Type	Length	A	B	C	D	BS	M	N	Mark	Type	Length	A	B	C	D	SW	P	R	Mark	Type	Length	W	X	Y	Z	Concrete CY/LF	Steel LBS/LF
0-2	11"	7	5"	A	1	15- 1	12- 9	1- 2	0- 7	13- 4	12"	7	5"	B	1	16- 1	13- 9	1- 2	0- 7	14- 4	10"	5	12"	C	Str	9- 6	12"	5	10"	12"	1.51	223
2.01-5	11"	7	5"	A	1	15- 1	12- 9	1- 2	0- 7	13- 4	12"	7	5"	B	1	16- 1	13- 9	1- 2	0- 7	14- 4	10"	5	12"	C	Str	9- 6	10"	5	12"	12"	1.51	219
5-10	11"	8	5"	A	1	15- 2	12- 8	1- 3	0- 8	13- 4	12"	8	5"	B	1	16- 2	13- 8	1- 3	0- 8	14- 4	10"	5	10"	C	Str	9- 6	10"	5	12"	12"	1.51	271
10-15	11"	8	5"	A	1	15- 2	12- 8	1- 3	0- 8	13- 4	12"	8	5"	B	1	16- 2	13- 8	1- 3	0- 8	14- 4	10"	5	9"	C	Str	9- 6	10"	5	12"	12"	1.51	274
15-20	14"	8	5"	A	1	15- 2	12- 8	1- 3	0- 8	13- 4	15"	8	5"	B	1	16- 2	13- 8	1- 3	0- 8	14- 4	10"	5	7"	C	Str	10- 0	10"	5	12"	12"	1.77	283
20-25	17"	8	5"	A	1	15- 2	12- 8	1- 3	0- 8	13- 4	18"	8	5"	B	1	16- 2	13- 8	1- 3	0- 8	14- 4	10"	5	6"	C	Str	10- 6	10"	5	12"	12"	2.03	291
25-30	18"	11	5"	A	1	17- 3	12- 5¼	2- 5	1- 2¾	13- 8	19"	11	5"	B	1	18- 3	13- 5¼	2- 5	1- 2¾	14- 8	12"	5	7"	C	Str	10- 8	12"	5	12"	12"	2.25	537
30-35	20"	11	5"	A	1	17- 3	12- 5¼	2- 5	1- 2¾	13- 8	21"	11	5"	B	1	18- 3	13- 5¼	2- 5	1- 2¾	14- 8	12"	5	5"	C	Str	11- 0	12"	5	12"	12"	2.43	554
35-40	23"	11	5"	A	1	17- 9	12-11¼	2- 5	1- 2¾	14- 2	24"	11	5"	B	1	18- 9	13-11¼	2- 5	1- 2¾	15- 2	15"	5	6"	C	Str	11- 6	15"	5	12"	12"	2.92	560

12'-0" Width x 10'-0" Height

Fill Height (Ft.)	Top Slab										Bottom Slab										Sidewall						Mark "E" Distribution				Quantities	
	TS	J	K	Mark	Type	Length	A	B	C	D	BS	M	N	Mark	Type	Length	A	B	C	D	SW	P	R	Mark	Type	Length	W	X	Y	Z	Concrete CY/LF	Steel LBS/LF
0-2	11"	7	5"	A	1	15- 1	12- 9	1- 2	0- 7	13- 4	12"	7	5"	B	1	16- 1	13- 9	1- 2	0- 7	14- 4	10"	5	11"	C	Str	11- 6	12"	5	10"	12"	1.63	234
2.01-5	11"	7	5"	A	1	15- 1	12- 9	1- 2	0- 7	13- 4	12"	7	5"	B	1	16- 1	13- 9	1- 2	0- 7	14- 4	10"	5	9"	C	Str	11- 6	10"	5	12"	12"	1.63	236
5-10	11"	8	5"	A	1	15- 2	12- 8	1- 3	0- 8	13- 4	12"	8	5"	B	1	16- 2	13- 8	1- 3	0- 8	14- 4	10"	5	7"	C	Str	11- 6	10"	5	12"	12"	1.63	293
10-15	12"	8	5"	A	1	15- 2	12- 8	1- 3	0- 8	13- 4	13"	8	5"	B	1	16- 2	13- 8	1- 3	0- 8	14- 4	10"	5	6"	C	Str	11- 8	10"	5	12"	12"	1.72	300
15-20	15"	8	5"	A	1	15- 6	13- 0	1- 3	0- 8	13- 8	16"	8	5"	B	1	16- 6	14- 0	1- 3	0- 8	14- 8	12"	6	8"	C	Str	12- 2	12"	5	12"	12"	2.13	311
20-25	17"	10	7"	A	1	16-11	12- 6¾	2- 2	1- 1¼	13- 8	18"	10	7"	B	1	17-11	13- 6¾	2- 2	1- 1¼	14- 8	12"	6	7"	C	Str	12- 6	12"	5	12"	12"	2.31	372
25-30	18"	11	5"	A	1	17- 9	12-11¼	2- 5	1- 2¾	14- 2	19"	11	5"	B	1	18- 9	13-11¼	2- 5	1- 2¾	15- 2	15"	6	8"	C	Str	12- 8	15"	5	12"	12"	2.65	573
30-35	21"	11	5"	A	1	17- 9	12-11¼	2- 5	1- 2¾	14- 2	22"	11	5"	B	1	18- 9	13-11¼	2- 5	1- 2¾	15- 2	15"	6	7"	C	Str	13- 2	15"	5	12"	12"	2.92	584
35-40	24"	11	5"	A	1	18- 3	13- 5¼	2- 5	1- 2¾	14- 8	25"	11	5"	B	1	19- 3	14- 5¼	2- 5	1- 2¾	15- 8	18"	6	7"	C	Str	13- 8	18"	5	12"	12"	3.46	599

NOTE:
Bar Dimensions are per bar.

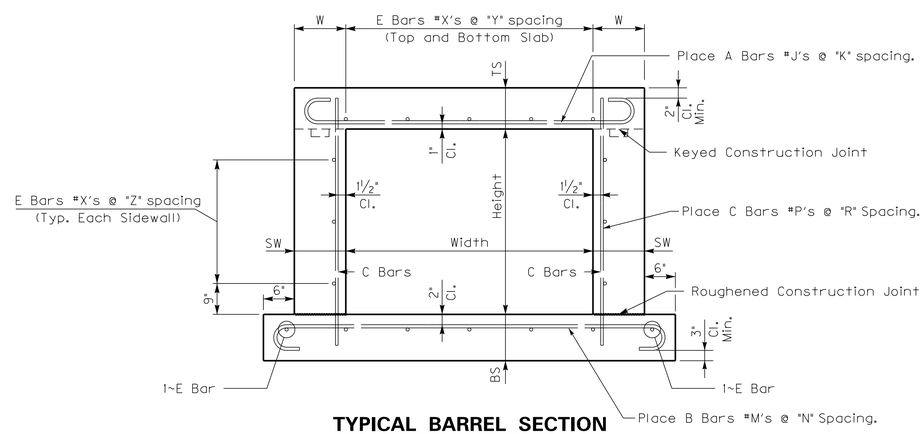

TYPICAL BARREL SECTION

NOTE:
A & B bars may need to be rotated to maintain shown clearances.

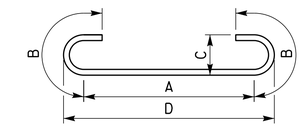

TYPE 1

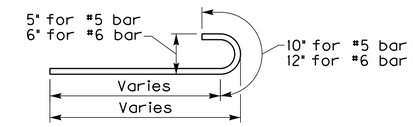

TYPE 4

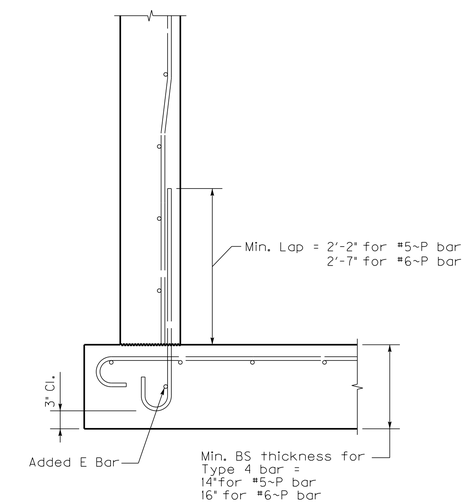

OPTIONAL HOOK DETAIL

NOTE:
The contractor will not be paid additionally if optional hook detail is used.

DRAWN E. Downey DATE 11/2017
CHECKED J. Van Zee 11/2017
RECOMMENDED
APPROVED F.H.W.A.
REVISED BY

KENTUCKY
DEPARTMENT OF HIGHWAYS

STANDARD CULVERT
12'-0" WIDTH

STANDARD DRAWING NO. B__-005-01

SUBMITTED _____ DIRECTOR DIVISION OF STRUCTURAL DESIGN — 11-01-17 DATE

APPROVED _____ STATE HIGHWAY ENGINEER — 11-01-17 DATE

14'-0" Width x 4'-0" Height

Fill Height (Ft.)	Top Slab										Bottom Slab										Sidewall						Mark "E" Distribution				Quantities	
	TS	J	K	Mark	Type	Length	A	B	C	D	BS	M	N	Mark	Type	Length	A	B	C	D	SW	P	R	Mark	Type	Length	W	X	Y	Z	Concrete CY/LF	Steel LBS/LF
0-2	12"	7	5"	A	1	17- 1	14- 9	1- 2	0- 7	15- 4	13"	7	5"	B	1	18- 1	15- 9	1- 2	0- 7	16- 4	10"	5	12"	C	Str	5- 8	13"	5	9"	12"	1.50	235
2.01-5	12"	8	6"	A	1	17- 2	14- 8	1- 3	0- 8	15- 4	13"	8	6"	B	1	18- 2	15- 8	1- 3	0- 8	16- 4	10"	5	12"	C	Str	5- 8	10"	5	12"	12"	1.50	243
5-10	12"	8	5"	A	1	17- 2	14- 8	1- 3	0- 8	15- 4	13"	8	5"	B	1	18- 2	15- 8	1- 3	0- 8	16- 4	10"	5	12"	C	Str	5- 8	10"	5	12"	12"	1.50	281
10-15	13"	8	5"	A	1	17- 2	14- 8	1- 3	0- 8	15- 4	14"	8	5"	B	1	18- 2	15- 8	1- 3	0- 8	16- 4	10"	5	12"	C	Str	5-10	10"	5	12"	12"	1.60	281
15-20	15"	9	5"	A	1	18- 2	14- 4¼	1-11	0-11¾	15- 4	16"	9	5"	B	1	19- 2	15- 4¼	1-11	0-11¾	16- 4	10"	5	12"	C	Str	6- 2	10"	5	12"	12"	1.80	360
20-25	17"	10	5"	A	1	18- 7	14- 2¾	2- 2	1- 1¼	15- 4	18"	10	5"	B	1	19- 7	15- 2¾	2- 2	1- 1¼	16- 4	10"	5	12"	C	Str	6- 6	10"	5	12"	12"	2.00	451
25-30	19"	11	5"	A	1	19- 3	14- 5¼	2- 5	1- 2¾	15- 8	20"	11	5"	B	1	20- 3	15- 5¼	2- 5	1- 2¾	16- 8	12"	5	12"	C	Str	6-10	12"	5	12"	12"	2.29	560
30-35	23"	11	5"	A	1	19- 9	14-11¼	2- 5	1- 2¾	16- 2	24"	11	5"	B	1	20- 9	15-11¼	2- 5	1- 2¾	17- 2	15"	5	12"	C	Str	7- 6	15"	5	12"	12"	2.84	574
35-40	26"	11	5"	A	1	20- 3	15- 5¼	2- 5	1- 2¾	16- 8	27"	11	5"	B	1	21- 3	16- 5¼	2- 5	1- 2¾	17- 8	18"	5	12"	C	Str	8- 0	18"	5	12"	12"	3.31	588

14'-0" Width x 6'-0" Height

Fill Height (Ft.)	Top Slab										Bottom Slab										Sidewall						Mark "E" Distribution				Quantities	
	TS	J	K	Mark	Type	Length	A	B	C	D	BS	M	N	Mark	Type	Length	A	B	C	D	SW	P	R	Mark	Type	Length	W	X	Y	Z	Concrete CY/LF	Steel LBS/LF
0-2	12"	7	5"	A	1	17- 1	14- 9	1- 2	0- 7	15- 4	13"	7	5"	B	1	18- 1	15- 9	1- 2	0- 7	16- 4	10"	5	12"	C	Str	7- 8	13"	5	9"	12"	1.62	243
2.01-5	12"	8	6"	A	1	17- 2	14- 8	1- 3	0- 8	15- 4	13"	8	6"	B	1	18- 2	15- 8	1- 3	0- 8	16- 4	10"	5	12"	C	Str	7- 8	10"	5	12"	12"	1.62	251
5-10	12"	8	5"	A	1	17- 2	14- 8	1- 3	0- 8	15- 4	13"	8	5"	B	1	18- 2	15- 8	1- 3	0- 8	16- 4	10"	5	12"	C	Str	7- 8	10"	5	12"	12"	1.62	289
10-15	13"	8	5"	A	1	17- 2	14- 8	1- 3	0- 8	15- 4	14"	8	5"	B	1	18- 2	15- 8	1- 3	0- 8	16- 4	10"	5	12"	C	Str	7-10	10"	5	12"	12"	1.72	289
15-20	15"	9	5"	A	1	18- 2	14- 4¼	1-11	0-11¾	15- 4	16"	9	5"	B	1	19- 2	15- 4¼	1-11	0-11¾	16- 4	10"	5	10"	C	Str	8- 2	10"	5	12"	12"	1.92	372
20-25	18"	10	5"	A	1	18-11	14- 6¾	2- 2	1- 1¼	15- 8	19"	10	5"	B	1	19-11	15- 6¾	2- 2	1- 1¼	16- 8	12"	5	10"	C	Str	8- 8	12"	5	12"	12"	2.33	470
25-30	20"	11	5"	A	1	19- 3	14- 5¼	2- 5	1- 2¾	15- 8	21"	11	5"	B	1	20- 3	15- 5¼	2- 5	1- 2¾	16- 8	12"	5	8"	C	Str	9- 0	12"	5	12"	12"	2.54	578
30-35	23"	11	5"	A	1	19- 9	14-11¼	2- 5	1- 2¾	16- 2	24"	11	5"	B	1	20- 9	15-11¼	2- 5	1- 2¾	17- 2	15"	5	9"	C	Str	9- 6	15"	5	12"	12"	3.03	589
35-40	27"	11	5"	A	1	20- 3	15- 5¼	2- 5	1- 2¾	16- 8	28"	11	5"	B	1	21- 3	16- 5¼	2- 5	1- 2¾	17- 8	18"	5	10"	C	Str	10- 2	18"	5	12"	12"	3.64	601

14'-0" Width x 8'-0" Height

Fill Height (Ft.)	Top Slab										Bottom Slab										Sidewall						Mark "E" Distribution				Quantities	
	TS	J	K	Mark	Type	Length	A	B	C	D	BS	M	N	Mark	Type	Length	A	B	C	D	SW	P	R	Mark	Type	Length	W	X	Y	Z	Concrete CY/LF	Steel LBS/LF
0-2	12"	8	6"	A	1	17- 2	14- 8	1- 3	0- 8	15- 4	13"	8	6"	B	1	18- 2	15- 8	1- 3	0- 8	16- 4	10"	5	12"	C	Str	9- 8	13"	5	9"	12"	1.75	268
2.01-5	12"	8	6"	A	1	17- 2	14- 8	1- 3	0- 8	15- 4	13"	8	6"	B	1	18- 2	15- 8	1- 3	0- 8	16- 4	10"	5	12"	C	Str	9- 8	10"	5	12"	12"	1.75	260
5-10	12"	8	5"	A	1	17- 2	14- 8	1- 3	0- 8	15- 4	13"	8	5"	B	1	18- 2	15- 8	1- 3	0- 8	16- 4	10"	5	10"	C	Str	9- 8	10"	5	12"	12"	1.75	301
10-15	13"	8	5"	A	1	17- 2	14- 8	1- 3	0- 8	15- 4	14"	8	5"	B	1	18- 2	15- 8	1- 3	0- 8	16- 4	10"	5	8"	C	Str	9-10	10"	5	12"	12"	1.85	308
15-20	16"	8	5"	A	1	17- 2	14- 8	1- 3	0- 8	15- 4	17"	8	5"	B	1	18- 2	15- 8	1- 3	0- 8	16- 4	10"	5	7"	C	Str	10- 4	10"	5	12"	12"	2.15	314
20-25	18"	10	5"	A	1	18-11	14- 6¾	2- 2	1- 1¼	15- 8	19"	10	5"	B	1	19-11	15- 6¾	2- 2	1- 1¼	16- 8	12"	5	7"	C	Str	10- 8	12"	5	12"	12"	2.48	491
25-30	20"	11	5"	A	1	19- 3	14- 5¼	2- 5	1- 2¾	15- 8	21"	11	5"	B	1	20- 3	15- 5¼	2- 5	1- 2¾	16- 8	12"	5	6"	C	Str	11- 0	12"	5	12"	12"	2.69	600
30-35	24"	11	5"	A	1	20- 3	15- 5¼	2- 5	1- 2¾	16- 8	25"	11	5"	B	1	21- 3	16- 5¼	2- 5	1- 2¾	17- 8	18"	6	9"	C	Str	11- 8	18"	5	12"	12"	3.54	627
35-40	28"	11	5"	A	1	20- 3	15- 5¼	2- 5	1- 2¾	16- 8	29"	11	5"	B	1	21- 3	16- 5¼	2- 5	1- 2¾	17- 8	18"	6	8"	C	Str	12- 4	18"	5	12"	12"	3.97	635

14'-0" Width x 10'-0" Height

Fill Height (Ft.)	Top Slab										Bottom Slab										Sidewall						Mark "E" Distribution				Quantities	
	TS	J	K	Mark	Type	Length	A	B	C	D	BS	M	N	Mark	Type	Length	A	B	C	D	SW	P	R	Mark	Type	Length	W	X	Y	Z	Concrete CY/LF	Steel LBS/LF
0-2	12"	8	6"	A	1	17- 2	14- 8	1- 3	0- 8	15- 4	13"	8	6"	B	1	18- 2	15- 8	1- 3	0- 8	16- 4	10"	5	11"	C	Str	11- 8	13"	5	9"	12"	1.87	279
2.01-5	12"	8	6"	A	1	17- 2	14- 8	1- 3	0- 8	15- 4	13"	8	6"	B	1	18- 2	15- 8	1- 3	0- 8	16- 4	10"	5	9"	C	Str	11- 8	10"	5	12"	12"	1.87	276
5-10	12"	8	5"	A	1	17- 2	14- 8	1- 3	0- 8	15- 4	13"	8	5"	B	1	18- 2	15- 8	1- 3	0- 8	16- 4	10"	5	7"	C	Str	11- 8	10"	5	12"	12"	1.87	323
10-15	13"	8	5"	A	1	17- 2	14- 8	1- 3	0- 8	15- 4	14"	8	5"	B	1	18- 2	15- 8	1- 3	0- 8	16- 4	10"	5	6"	C	Str	11-10	10"	5	12"	12"	1.97	331
15-20	16"	9	5"	A	1	18- 6	14- 8¼	1-11	0-11¾	15- 8	17"	9	5"	B	1	19- 6	15- 8¼	1-11	0-11¾	16- 8	12"	6	8"	C	Str	12- 4	12"	5	12"	12"	2.43	421
20-25	18"	11	5"	A	1	19- 9	14-11¼	2- 5	1- 2¾	16- 2	19"	11	5"	B	1	20- 9	15-11¼	2- 5	1- 2¾	17- 2	15"	5	6"	C	Str	12- 8	15"	5	12"	12"	2.87	624
25-30	21"	11	5"	A	1	19- 9	14-11¼	2- 5	1- 2¾	16- 2	22"	11	5"	B	1	20- 9	15-11¼	2- 5	1- 2¾	17- 2	15"	5	5"	C	Str	13- 2	15"	5	12"	12"	3.19	637
30-35	25"	11	5"	A	1	20- 3	15- 5¼	2- 5	1- 2¾	16- 8	26"	11	5"	B	1	21- 3	16- 5¼	2- 5	1- 2¾	17- 8	18"	6	8"	C	Str	13-10	18"	5	12"	12"	3.87	646
35-40	28"	11	5"	A	1	20- 3	15- 5¼	2- 5	1- 2¾	16- 8	29"	11	5"	B	1	21- 3	16- 5¼	2- 5	1- 2¾	17- 8	18"	6	7"	C	Str	14- 4	18"	5	12"	12"	4.20	658

NOTE:
Bar Dimensions are per bar.

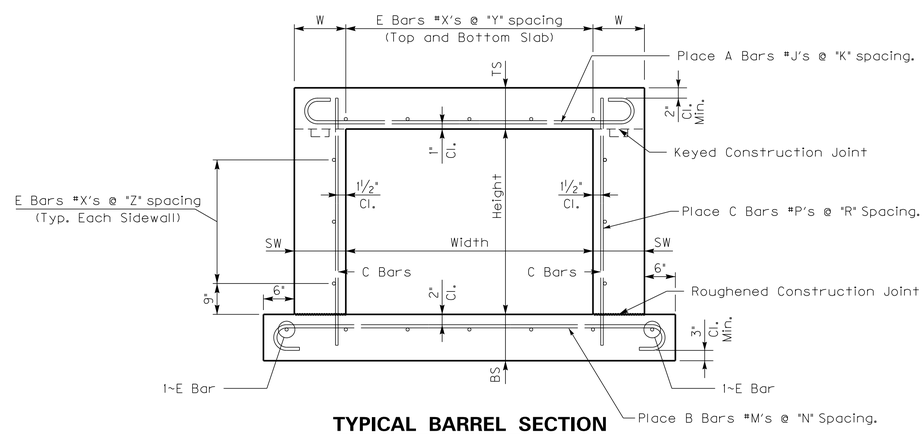

TYPICAL BARREL SECTION

NOTE:
A & B bars may need to be rotated to maintain shown clearances.

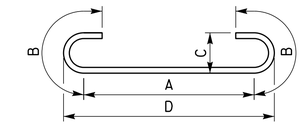

TYPE 1

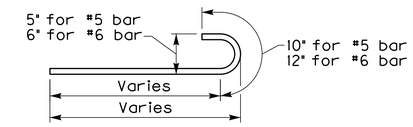

TYPE 4

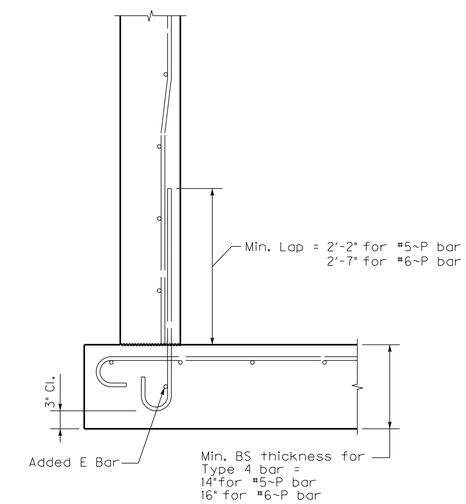

OPTIONAL HOOK DETAIL

NOTE:
The contractor will not be paid additionally if optional hook detail is used.

KENTUCKY
DEPARTMENT OF HIGHWAYS

STANDARD CULVERT
14'-0" WIDTH

STANDARD DRAWING NO. B__-006-01

SUBMITTED _____ DIRECTOR DIVISION OF STRUCTURAL DESIGN — DATE 11-01-17

APPROVED _____ STATE HIGHWAY ENGINEER — DATE 11-01-17

		DATE
DRAWN	E. Downey	11/2017
CHECKED	J. Van Zee	11/2017
RECOMMENDED		
APPROVED F.H.W.A.		
REVISED BY		

16'-0" Width x 4'-0" Height

Fill Height (Ft.)	Top Slab										Bottom Slab										Sidewall						Mark "E" Distribution				Quantities	
	TS	J	K	Mark	Type	Length	A	B	C	D	BS	M	N	Mark	Type	Length	A	B	C	D	SW	P	R	Mark	Type	Length	W	X	Y	Z	Concrete CY/LF	Steel LBS/LF
0-2	13"	8	5"	A	1	19- 2	16- 8	1- 3	0- 8	17- 4	14"	8	5"	B	1	20- 2	17- 8	1- 3	0- 8	18- 4	10"	5	12"	C	Str	5-10	11½"	5	9"	12"	1.77	321
2.01-5	13"	8	5"	A	1	19- 2	16- 8	1- 3	0- 8	17- 4	14"	8	5"	B	1	20- 2	17- 8	1- 3	0- 8	18- 4	10"	5	12"	C	Str	5-10	10"	5	12"	12"	1.77	311
5-10	14"	8	5"	A	1	19- 2	16- 8	1- 3	0- 8	17- 4	15"	8	5"	B	1	20- 2	17- 8	1- 3	0- 8	18- 4	10"	5	12"	C	Str	6- 0	10"	5	12"	12"	1.88	311
10-15	15"	9	5"	A	1	20- 2	16- 4¼	1-11	0-11¾	17- 4	16"	9	5"	B	1	21- 2	17- 4¼	1-11	0-11¾	18- 4	10"	5	12"	C	Str	6- 2	10"	5	12"	12"	1.99	397
15-20	17"	9	5"	A	1	20- 2	16- 4¼	1-11	0-11¾	17- 4	18"	9	5"	B	1	21- 2	17- 4¼	1-11	0-11¾	18- 4	10"	5	12"	C	Str	6- 6	10"	5	12"	12"	2.22	397
20-25	19"	11	5"	A	1	21- 3	16- 5¼	2- 5	1- 2¾	17- 8	20"	11	5"	B	1	22- 3	17- 5¼	2- 5	1- 2¾	18- 8	12"	5	12"	C	Str	6-10	12"	5	12"	12"	2.53	615
25-30	23"	11	5"	A	1	21- 9	16-11¼	2- 5	1- 2¾	18- 2	24"	11	5"	B	1	22- 9	17-11¼	2- 5	1- 2¾	19- 2	15"	5	12"	C	Str	7- 6	15"	5	12"	12"	3.13	630
30-35	26"	11	5"	A	1	22- 3	17- 5¼	2- 5	1- 2¾	18- 8	27"	11	5"	B	1	23- 3	18- 5¼	2- 5	1- 2¾	19- 8	18"	5	12"	C	Str	8- 0	18"	5	12"	12"	3.64	643
35-40	30"	11	5"	A	1	22- 3	17- 5¼	2- 5	1- 2¾	18- 8	31"	11	5"	B	1	23- 3	18- 5¼	2- 5	1- 2¾	19- 8	18"	5	12"	C	Str	8- 8	18"	5	12"	12"	4.12	645

16'-0" Width x 6'-0" Height

Fill Height (Ft.)	Top Slab										Bottom Slab										Sidewall						Mark "E" Distribution				Quantities	
	TS	J	K	Mark	Type	Length	A	B	C	D	BS	M	N	Mark	Type	Length	A	B	C	D	SW	P	R	Mark	Type	Length	W	X	Y	Z	Concrete CY/LF	Steel LBS/LF
0-2	13"	8	5"	A	1	19- 2	16- 8	1- 3	0- 8	17- 4	14"	8	5"	B	1	20- 2	17- 8	1- 3	0- 8	18- 4	10"	5	12"	C	Str	7-10	11½"	5	9"	12"	1.89	330
2.01-5	13"	8	5"	A	1	19- 2	16- 8	1- 3	0- 8	17- 4	14"	8	5"	B	1	20- 2	17- 8	1- 3	0- 8	18- 4	10"	5	12"	C	Str	7-10	10"	5	12"	12"	1.89	319
5-10	14"	8	5"	A	1	19- 2	16- 8	1- 3	0- 8	17- 4	15"	8	5"	B	1	20- 2	17- 8	1- 3	0- 8	18- 4	10"	5	12"	C	Str	8- 0	10"	5	12"	12"	2.00	320
10-15	15"	9	5"	A	1	20- 2	16- 4¼	1-11	0-11¾	17- 4	16"	9	5"	B	1	21- 2	17- 4¼	1-11	0-11¾	18- 4	10"	5	12"	C	Str	8- 2	10"	5	12"	12"	2.12	405
15-20	17"	9	5"	A	1	20- 2	16- 4¼	1-11	0-11¾	17- 4	18"	9	5"	B	1	21- 2	17- 4¼	1-11	0-11¾	18- 4	10"	5	10"	C	Str	8- 6	10"	5	12"	12"	2.34	409
20-25	19"	11	5"	A	1	21- 3	16- 5¼	2- 5	1- 2¾	17- 8	20"	11	5"	B	1	22- 3	17- 5¼	2- 5	1- 2¾	18- 8	12"	5	10"	C	Str	8-10	12"	5	12"	12"	2.68	627
25-30	23"	11	5"	A	1	21- 9	16-11¼	2- 5	1- 2¾	18- 2	24"	11	5"	B	1	22- 9	17-11¼	2- 5	1- 2¾	19- 2	15"	5	11"	C	Str	9- 6	15"	5	12"	12"	3.32	640
30-35	27"	11	5"	A	1	22- 3	17- 5¼	2- 5	1- 2¾	18- 8	28"	11	5"	B	1	23- 3	18- 5¼	2- 5	1- 2¾	19- 8	18"	5	11"	C	Str	10- 2	18"	5	12"	12"	3.98	654
35-40	31"	11	5"	A	1	22- 3	17- 5¼	2- 5	1- 2¾	18- 8	32"	11	5"	B	1	23- 3	18- 5¼	2- 5	1- 2¾	19- 8	18"	5	9"	C	Str	10-10	18"	5	12"	12"	4.46	661

16'-0" Width x 8'-0" Height

Fill Height (Ft.)	Top Slab										Bottom Slab										Sidewall						Mark "E" Distribution				Quantities	
	TS	J	K	Mark	Type	Length	A	B	C	D	BS	M	N	Mark	Type	Length	A	B	C	D	SW	P	R	Mark	Type	Length	W	X	Y	Z	Concrete CY/LF	Steel LBS/LF
0-2	13"	8	5"	A	1	19- 2	16- 8	1- 3	0- 8	17- 4	14"	8	5"	B	1	20- 2	17- 8	1- 3	0- 8	18- 4	10"	5	12"	C	Str	9-10	11½"	5	9"	12"	2.01	338
2.01-5	13"	8	5"	A	1	19- 2	16- 8	1- 3	0- 8	17- 4	14"	8	5"	B	1	20- 2	17- 8	1- 3	0- 8	18- 4	10"	5	12"	C	Str	9-10	10"	5	12"	12"	2.01	328
5-10	14"	8	5"	A	1	19- 2	16- 8	1- 3	0- 8	17- 4	15"	8	5"	B	1	20- 2	17- 8	1- 3	0- 8	18- 4	10"	5	10"	C	Str	10- 0	10"	5	12"	12"	2.13	332
10-15	15"	9	5"	A	1	20- 2	16- 4¼	1-11	0-11¾	17- 4	16"	9	5"	B	1	21- 2	17- 4¼	1-11	0-11¾	18- 4	10"	5	8"	C	Str	10- 2	10"	5	12"	12"	2.24	424
15-20	17"	10	5"	A	1	20- 7	16- 2¾	2- 2	1- 1¼	17- 4	18"	10	5"	B	1	21- 7	17- 2¾	2- 2	1- 1¼	18- 4	10"	5	7"	C	Str	10- 6	10"	5	12"	12"	2.46	529
20-25	20"	11	5"	A	1	21- 3	16- 5¼	2- 5	1- 2¾	17- 8	21"	11	5"	B	1	22- 3	17- 5¼	2- 5	1- 2¾	18- 8	12"	5	7"	C	Str	11- 0	12"	5	12"	12"	2.94	649
25-30	24"	11	5"	A	1	22- 3	17- 5¼	2- 5	1- 2¾	18- 8	25"	11	5"	B	1	23- 3	18- 5¼	2- 5	1- 2¾	19- 8	18"	5	8"	C	Str	11- 8	18"	5	12"	12"	3.84	672
30-35	28"	11	5"	A	1	22- 3	17- 5¼	2- 5	1- 2¾	18- 8	29"	11	5"	B	1	23- 3	18- 5¼	2- 5	1- 2¾	19- 8	18"	6	9"	C	Str	12- 4	18"	5	12"	12"	4.33	684
35-40	31"	11	5"	A	1	22- 3	17- 5¼	2- 5	1- 2¾	18- 8	32"	11	5"	B	1	23- 3	18- 5¼	2- 5	1- 2¾	19- 8	18"	6	8"	C	Str	12-10	18"	5	12"	12"	4.69	693

16'-0" Width x 10'-0" Height

Fill Height (Ft.)	Top Slab										Bottom Slab										Sidewall						Mark "E" Distribution				Quantities	
	TS	J	K	Mark	Type	Length	A	B	C	D	BS	M	N	Mark	Type	Length	A	B	C	D	SW	P	R	Mark	Type	Length	W	X	Y	Z	Concrete CY/LF	Steel LBS/LF
0-2	13"	8	5"	A	1	19- 2	16- 8	1- 3	0- 8	17- 4	14"	8	5"	B	1	20- 2	17- 8	1- 3	0- 8	18- 4	10"	5	11"	C	Str	11-10	11½"	5	9"	12"	2.14	349
2.01-5	13"	8	5"	A	1	19- 2	16- 8	1- 3	0- 8	17- 4	14"	8	5"	B	1	20- 2	17- 8	1- 3	0- 8	18- 4	10"	5	9"	C	Str	11-10	10"	5	12"	12"	2.14	344
5-10	14"	8	5"	A	1	19- 2	16- 8	1- 3	0- 8	17- 4	15"	8	5"	B	1	20- 2	17- 8	1- 3	0- 8	18- 4	10"	5	7"	C	Str	12- 0	10"	5	12"	12"	2.25	354
10-15	16"	9	5"	A	1	20- 2	16- 4¼	1-11	0-11¾	17- 4	17"	9	5"	B	1	21- 2	17- 4¼	1-11	0-11¾	18- 4	10"	5	6"	C	Str	12- 4	10"	5	12"	12"	2.47	448
15-20	17"	10	5"	A	1	20-11	16- 6¾	2- 2	1- 1¼	17- 8	18"	10	5"	B	1	21-11	17- 6¾	2- 2	1- 1¼	18- 8	12"	5	6"	C	Str	12- 6	12"	5	12"	12"	2.75	554
20-25	20"	11	5"	A	1	21- 3	16- 5¼	2- 5	1- 2¾	17- 8	21"	11	5"	B	1	22- 3	17- 5¼	2- 5	1- 2¾	18- 8	12"	5	5"	C	Str	13- 0	12"	5	12"	12"	3.09	679
25-30	25"	11	5"	A	1	22- 3	17- 5¼	2- 5	1- 2¾	18- 8	26"	11	5"	B	1	23- 3	18- 5¼	2- 5	1- 2¾	19- 8	18"	5	5"	C	Str	13-10	18"	5	12"	12"	4.19	709
30-35	28"	11	5"	A	1	22- 3	17- 5¼	2- 5	1- 2¾	18- 8	29"	11	5"	B	1	23- 3	18- 5¼	2- 5	1- 2¾	19- 8	18"	6	8"	C	Str	14- 4	18"	5	12"	12"	4.55	704
35-40	32"	11	5"	A	1	22- 3	17- 5¼	2- 5	1- 2¾	18- 8	33"	11	5"	B	1	23- 3	18- 5¼	2- 5	1- 2¾	19- 8	18"	6	7"	C	Str	15- 0	18"	5	12"	12"	5.03	716

NOTE:
Bar Dimensions are per bar.

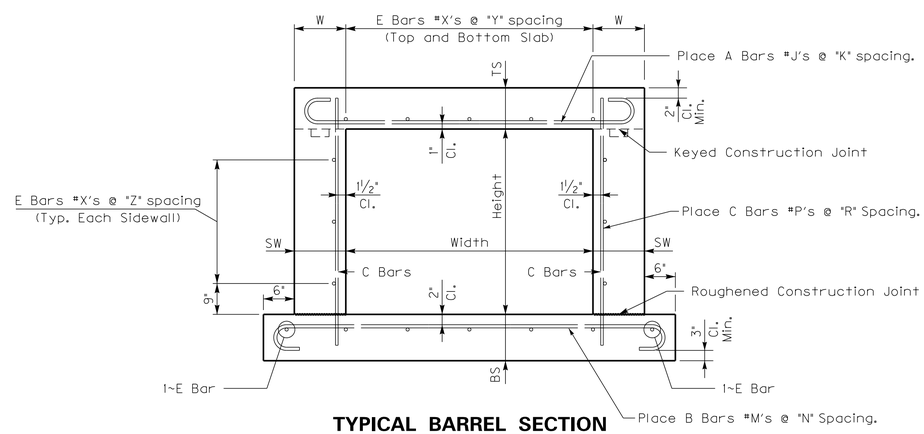

TYPICAL BARREL SECTION

NOTE:
A & B bars may need to be rotated to maintain shown clearances.

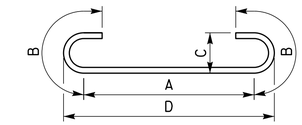

TYPE 1

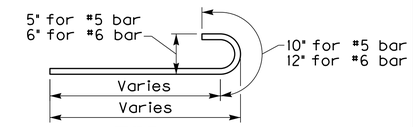

TYPE 4

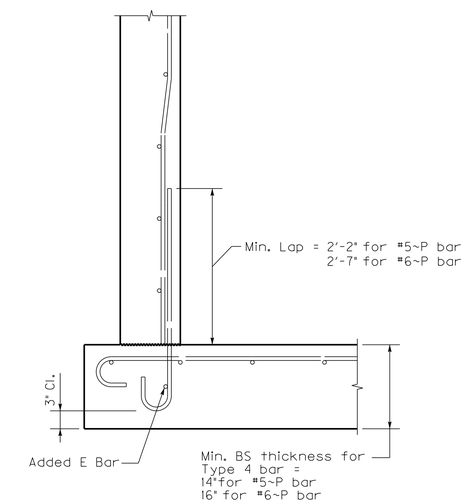

OPTIONAL HOOK DETAIL

NOTE:
The contractor will not be paid additionally if optional hook detail is used.

DRAWN E. Downey DATE 11/2017
CHECKED J. Van Zee 11/2017
RECOMMENDED
APPROVED F.H.W.A.
REVISED BY

KENTUCKY
DEPARTMENT OF HIGHWAYS

STANDARD CULVERT
16'-0" WIDTH

STANDARD DRAWING NO. B__-007-01

SUBMITTED _____ DIRECTOR DIVISION OF STRUCTURAL DESIGN — 11-01-17 DATE

APPROVED _____ STATE HIGHWAY ENGINEER — 11-01-17 DATE